Fig. 57: Power Windows Circuit (2 of 2)

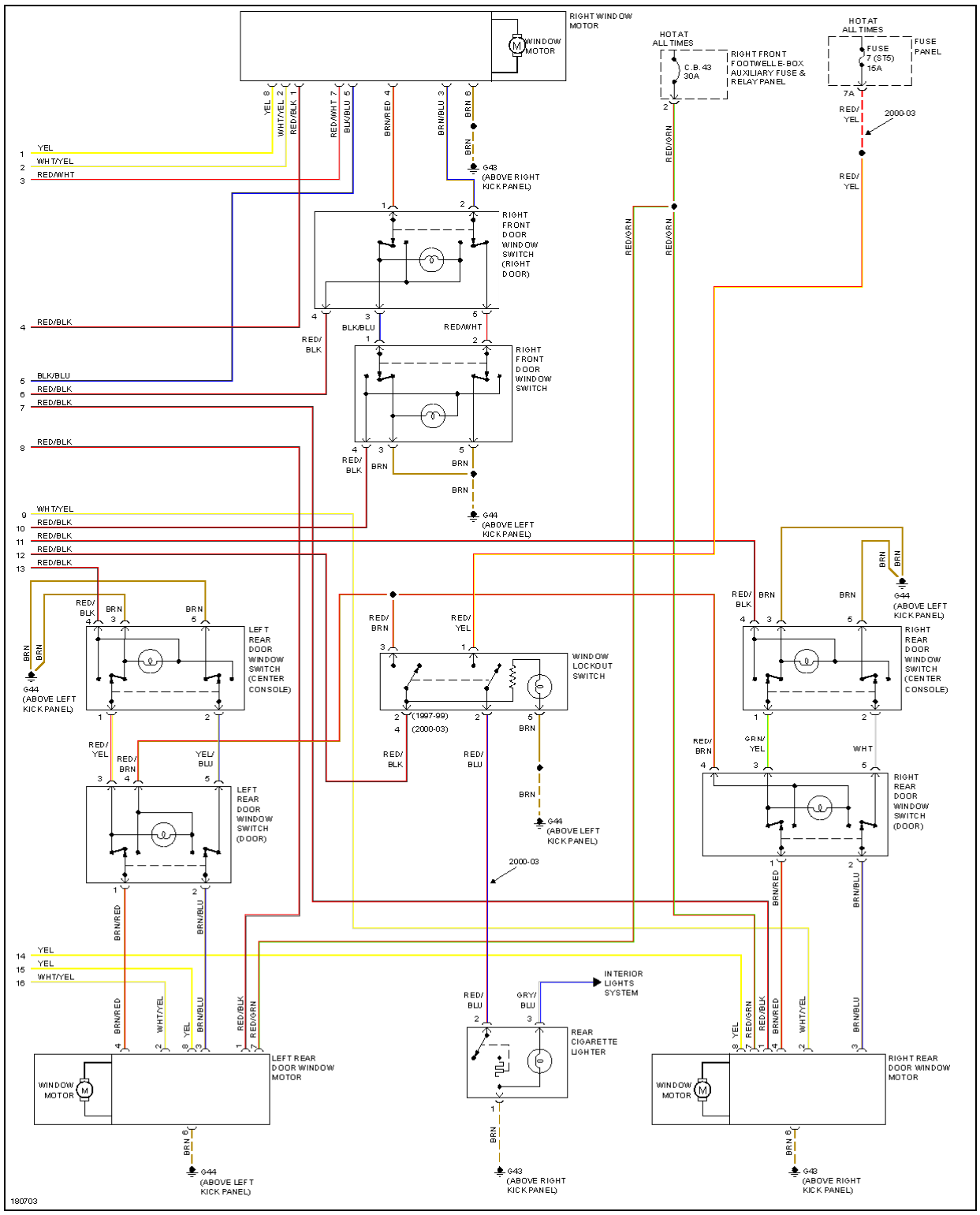

© 2011 Mitchell Repair Information Company, LLC.