Fig. 10: Cruise Control Circuit

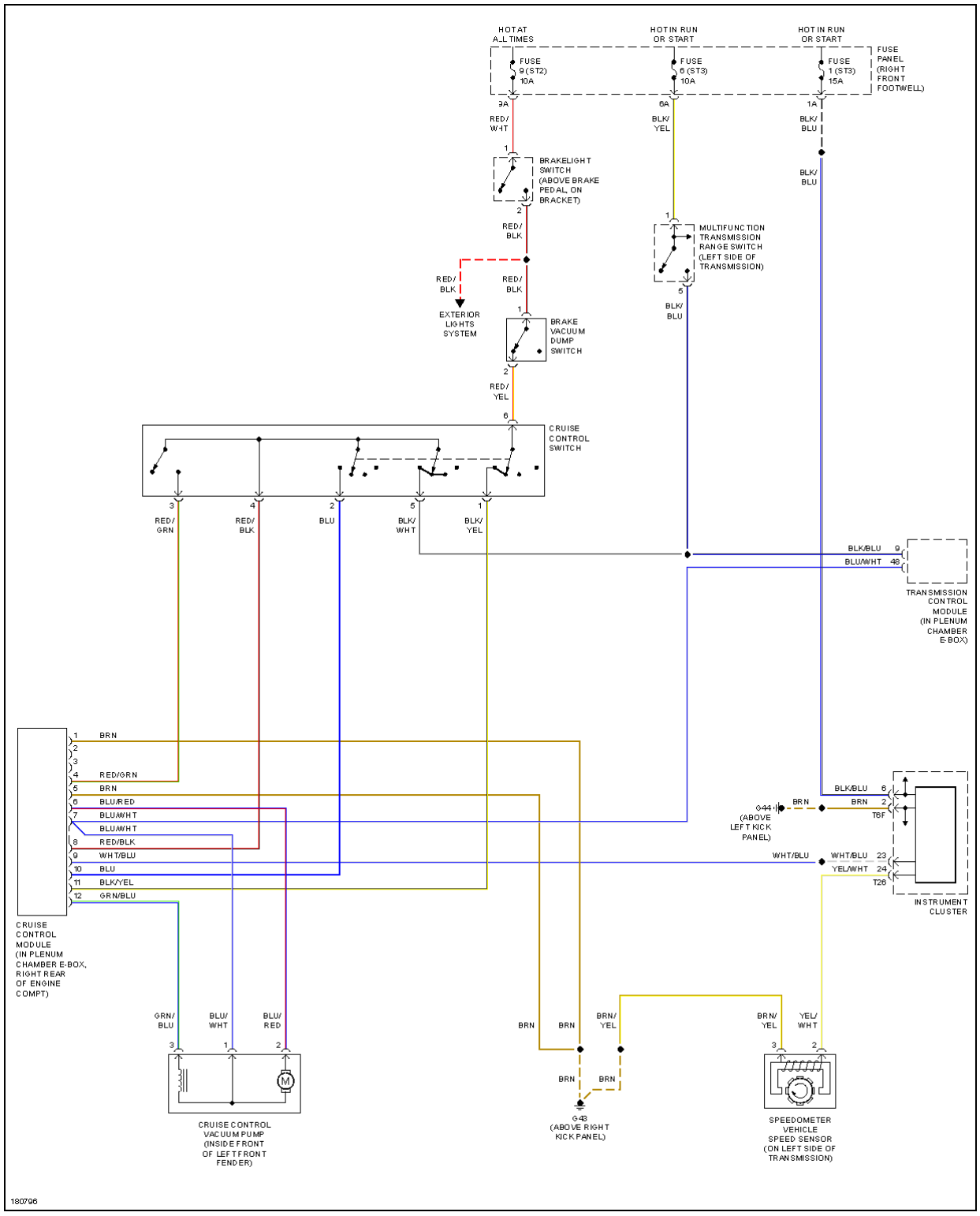

© 2005 Mitchell Repair Information Company, LLC.